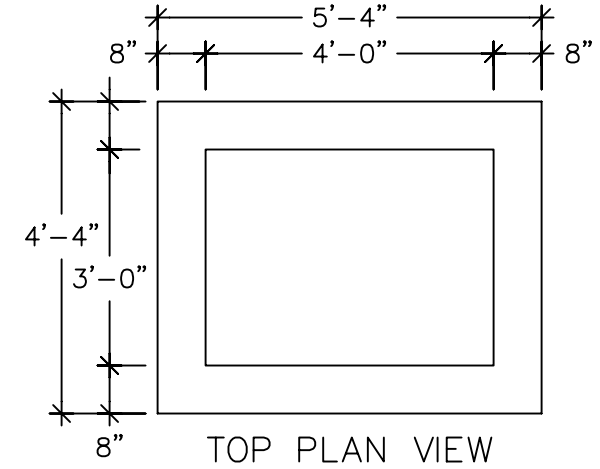

TOP PLAN VIEW

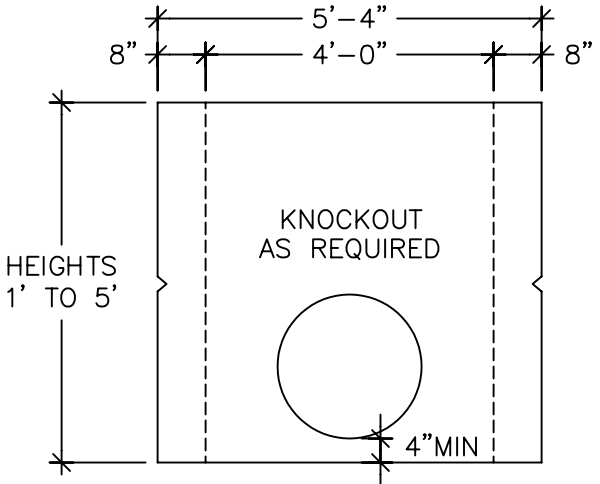

FRONT ELEVATION

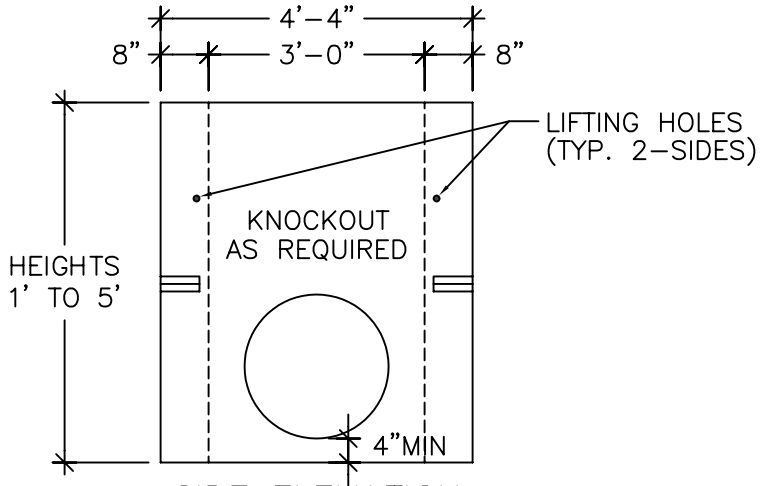

SIDE ELEVATION

STATE CATCH BASIN 8" WALL RISER

DESIGN COMFORMS TO CDOT AND LOCAL SPECIFICATIONS.

NOTES:

1. REINFORCING STEEL DEFORMED BARS CONFORM TO LATEST ASTM SPECIFICATION A615.
2. CONCRETE COMPRESSIVE STRENGTH- 4000 PSI AT 28 DAYS.
3. METHOD OF MANUFACTURE: WET CAST.
4. SECTION IS MONOLITHIC.
5. DESIGN LOAD: AASHTO H-20
6. KNOCKOUT SIZES AND LOCATIONS ARE CAST AS REQUIRED.

WEIGHT CHART

PRODUCT	APPROX WEIGHT
8" WALL RISER PER FOOT	1700 LBS.

UNITED CONCRETE PRODUCTS INC.

173 CHURCH STREET
YALESVILLE, CT 06492

TEL. 800 234-3119
(203) 269-3119

FAX. (203) 265-4941