TYPE I CATCH BASIN BASE SLAB AND SUMP

DESIGN COMFORMS TO CDOT AND LOCAL SPECIFICATIONS.

NOTES:

1. REINFORCING STEEL WELDED WIRE FABRIC CONFORMS TO LATEST ASTM SPECIFICATION A185.
2. REINFORCING STEEL DEFORMED BARS CONFORM TO LATEST ASTM SPECIFICATION A615.
3. CONCRETE COMPRESSIVE STRENGTH– 4000 PSI AT 28 DAYS.
4. METHOD OF MANUFACTURE: WET CAST.
5. SECTION IS MONOLITHIC.
6. DESIGN LOAD: AASHTO H–20

WEIGHT CHART

PRODUCT	APPROX WEIGHT
8" BASE SLAB	3050 LBS.
SUMP	5200 LBS.

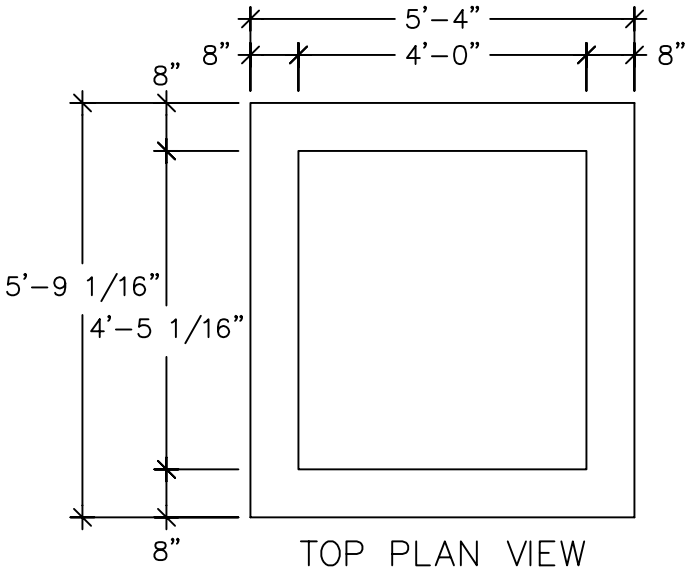

TOP PLAN VIEW

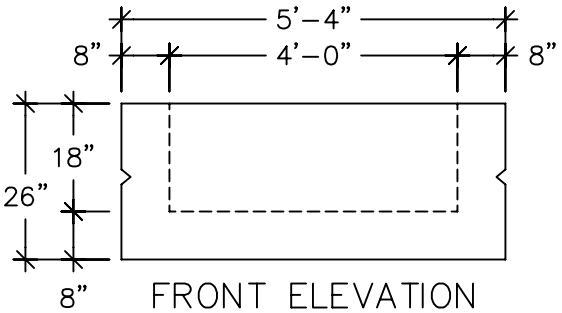

FRONT ELEVATION

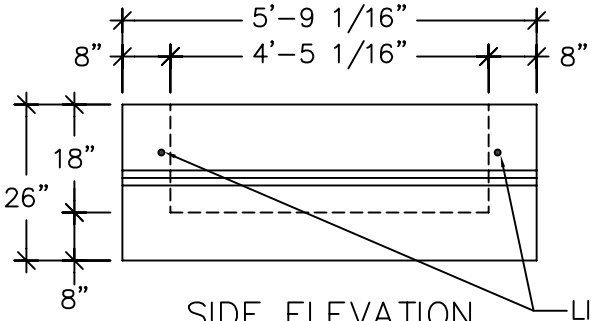

SIDE ELEVATION

SUMP

LIFTING HOLES
(TYP. 2–SIDES)

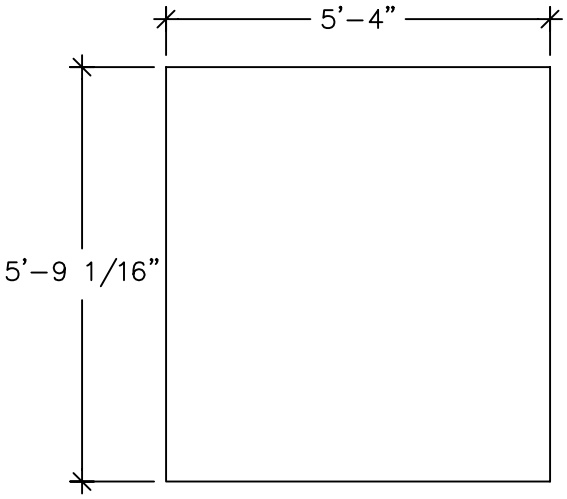

TOP PLAN VIEW
SLAB IS 8" THICK

BASE SLAB

UNITED CONCRETE PRODUCTS INC.

173 CHURCH STREET
YALESVILLE, CT 06492

TEL. 800 234–3119
(203) 269–3119

FAX. (203) 265–4941