TYPE II CATCH BASIN CORBEL

DESIGN COMFORMS TO CDOT AND LOCAL SPECIFICATIONS.

NOTES:

1. REINFORCING STEEL DEFORMED BARS CONFORM TO LATEST ASTM SPECIFICATION A615.
2. CONCRETE COMPRESSIVE STRENGTH– 4000 PSI AT 28 DAYS.
3. METHOD OF MANUFACTURE: WET CAST.
4. SECTION IS MONOLITHIC.
5. DESIGN LOAD: AASHTO H–20

WEIGHT CHART

PRODUCT	APPROX WEIGHT
CORBEL	2700 LBS.

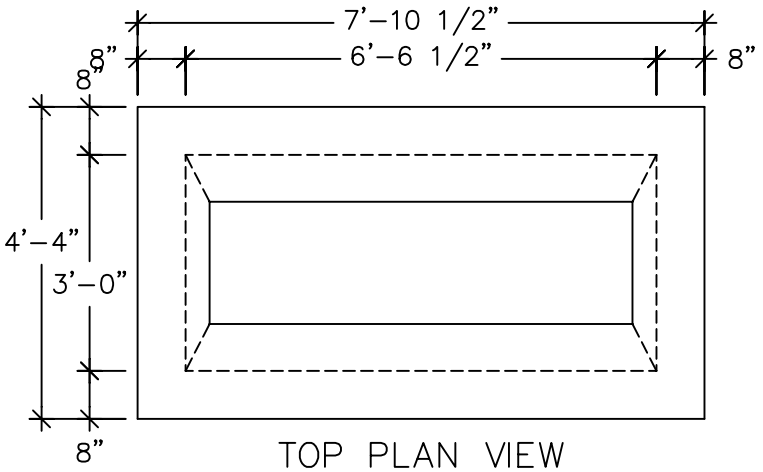

TOP PLAN VIEW

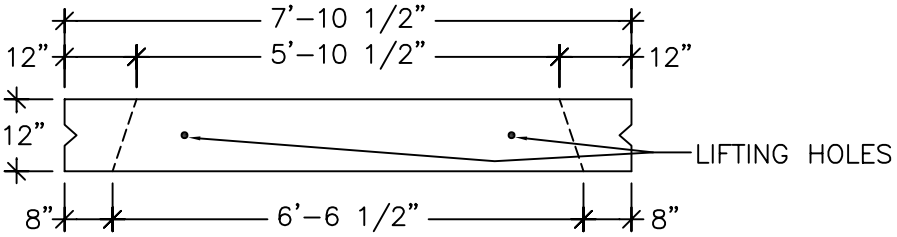

FRONT ELEVATION

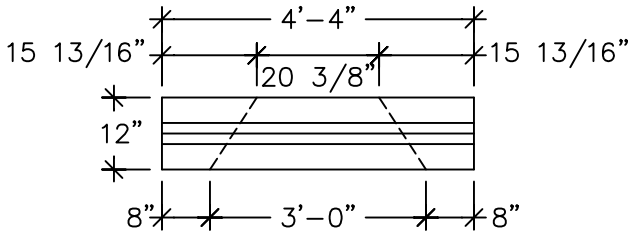

SIDE ELEVATION

UNITED CONCRETE PRODUCTS INC.

173 CHURCH STREET
YALESVILLE, CT 06492

TEL. 800 234–3119
(203) 269–3119

FAX. (203) 265–4941