TRANSFORMER PAD
UNITED ILLUMINATING
901 / 750–2000 KVA

NOTES:

1. MEETS ALL PROVISIONS OF UNITED ILLUMINATING
2. REINFORCING STEEL CONFORMS TO LATEST ASTM SPECIFICATION A185/A615
3. CONCRETE COMPRESSIVE STRENGTH– 4000 PSI AT 28 DAYS.
4. METHOD OF MANUFACTURE: WET CAST.
5. 7/8" LIFTING PINS REQUIRED

WEIGHT CHART

PRODUCT	APPROX WEIGHT
901	8,000 LBS.

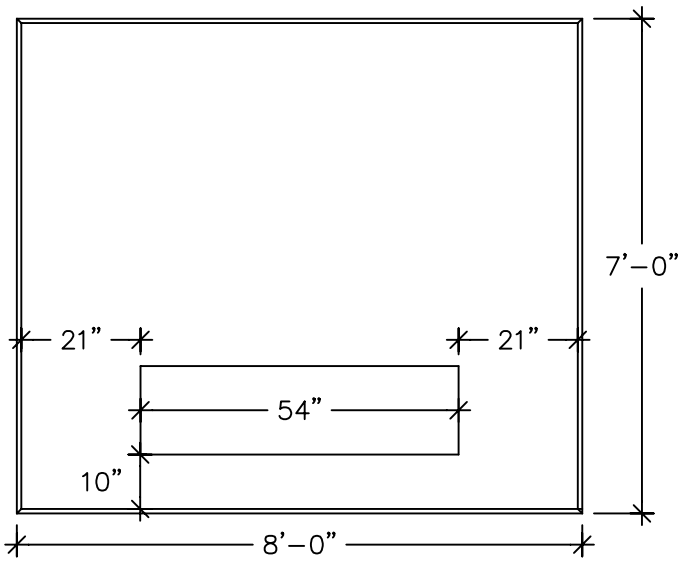

TOP VIEW

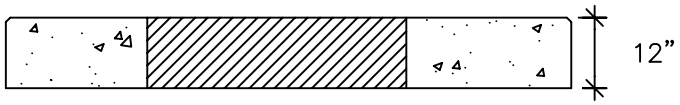

SIDE VIEW

UNITED CONCRETE PRODUCTS INC.

173 CHURCH STREET
YALESVILLE, CT 06492

TEL. 800 234–3119
(203) 269–3119

FAX. (203) 265–4941