Precast Concrete CURB

Six concrete reasons to choose Precast Curbing from United Concrete Products

1. Durable
With the proven life expectancy of concrete, precast curbing has the durability required to withstand harsh New England winters without deteriorating in the summer sun.

2. Good-looking
Clean lines and quality finishes give precast concrete curbing the esthetic edge. Concrete's proven resistance to abrasion means curbing that wears beautifully - year after year. No cast-in-place substitute could possibly measure up.

3. Easily installed
Precast concrete curbing installs smoothly, and is easy to replace or reconfigure. Our wide selection of various length straights, radii, and transition ends offer flexibility not only during the initial installation, but throughout the life-time of your project.

4. Quality assurance
Precast concrete curb means assurance of the highest quality concrete plus computer controlled consistency and factory installed reinforcement - all of which is unavailable in any cast-in-place substitute.

5. Readily available
Our modern manufacturing facilities can usually turn your order around in days. Because all segments are shipped according to your plans, you'll avoid costly installation delays.

6. Cost-effective
Precast concrete curbing offers excellence with economy. You'll enjoy esthetics and permanence at much lower prices than granite. The long life durability of precast curb offers a permanent advantage over bituminous and cast-in-place concrete curbing. The result - long term savings in time and money.

Concrete Curbing

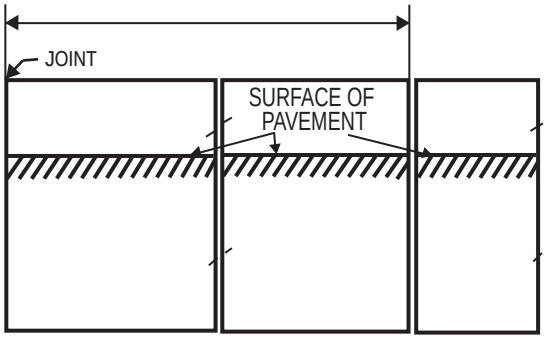

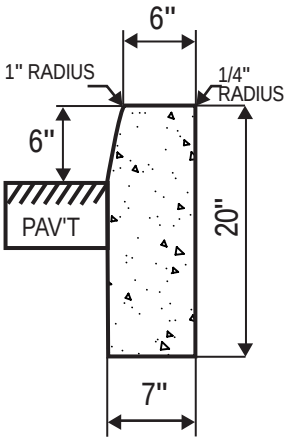

Also Available:
Concrete Park Curbing

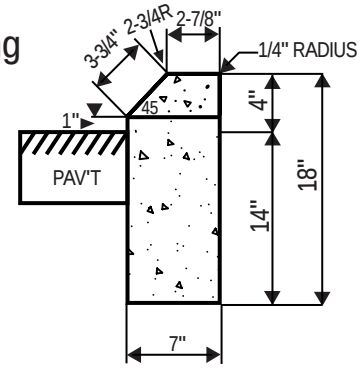

Specifications

1. Concrete strength 5,000 psi
2. Weight 135 lbs./LF
3. 5 - 7% air entrainment
4. Manufactured to Connecticut D.O.T specifications
5. 2x6" LG #5 Rebar - Connecting Pins

UNITED CONCRETE PRODUCTS INC.

United Concrete Products, Inc.
173 Church Street
Yalesville, CT 06492

Tel: (203) 269-3119
(800) 234-3119
Fax: (203) 265-4941

Email: **info@unitedconcrete.com**
Web: **www.unitedconcrete.com**

Please visit our web site to get updated and detailed product information, download drawings and specifications.

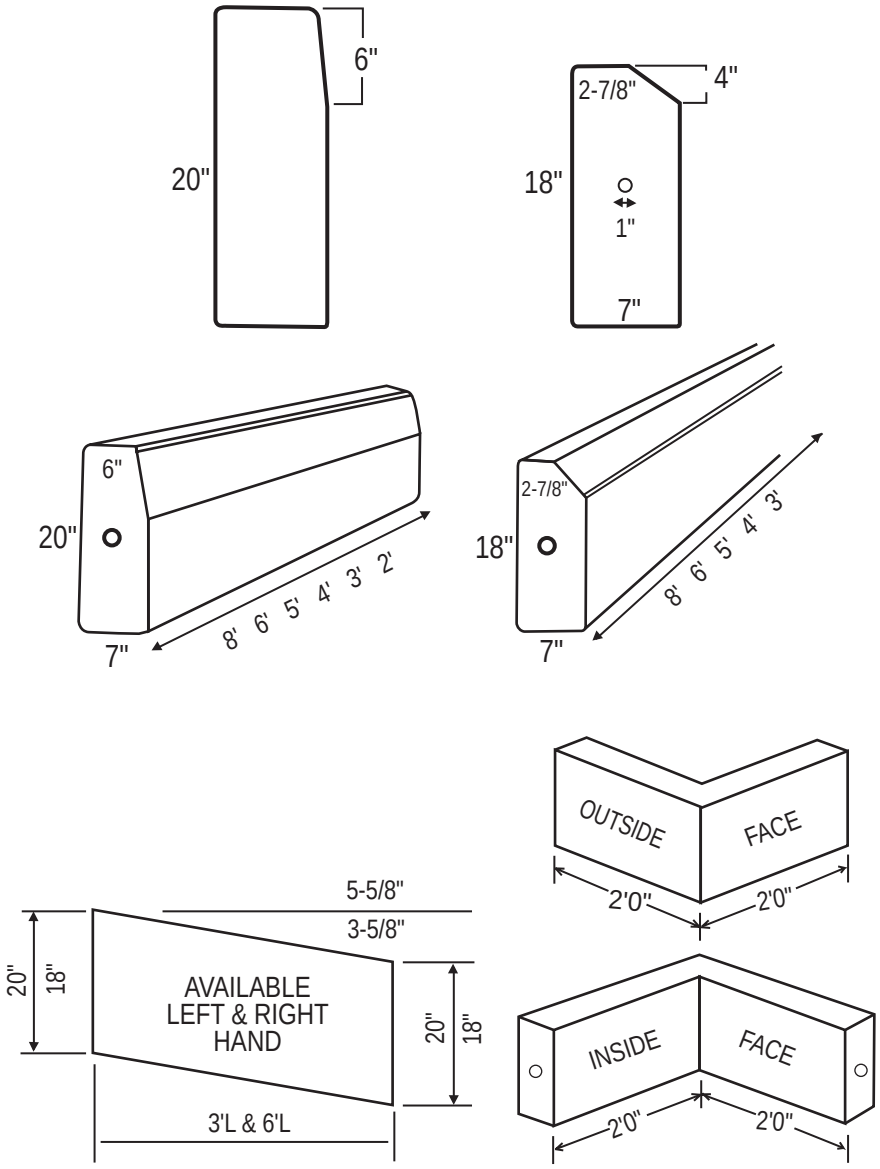

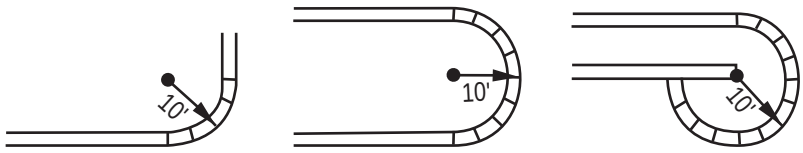

4 Pieces 8 Pieces 12 Pieces

Radius: 10' Pieces per full circle = 16

Precast concrete curbing is available in two types:

CONCRETE CURBING:
20" H with squared edge finish.

CONCRETE PARK CURBING:
18" H with beveled edge finish.

Both types meet Connecticut DOT specifications.

STANDARD FEATURES:
dowel pin hole: 1" dia. X4" depth.

STRAIGHT DIMENSIONS:
Concrete Curbing:
20" H x 6" W (top) x 7" W (base)
Concrete Park Curbing:
18" H x 2-7/8" W (top)x7" W (base).
Standard lengths: 8', 6', 5', 4' and 3'

RADIUS DIMENSIONS:
Same as straight sections above.
Standard Radii: Concrete Curbing and Concrete Park Curbing in 4' lengths can be assembled to form the following radii:
2', 3', 5', 10', 15' 20' 25' 30' and 35'.
Consult chart (bottom) when ordering.
20', 25', 30', 35', 40' and 50' radii available in 8' lengths. Concrete Curb only.

TRANSITION END DIMENSIONS
Concrete Curbing:
20"H x 6" W (top) x 7' W (base)
Concrete Park Curbing:
18" H x 2-7/8" W (top) x 7"W (base)
Standard Length: 6' and 3' for Concrete and 3' for Concrete Park Curbing.

90 INSIDE AND OUTSIDE CORNERS
Corner sections available for only concrete curbing style.

Radius		2'	3'	5'	10'	15'	20'	25'	30'	35'	40'	50'
No. Pieces Req./Circle	4' Lengths	4*	4	8	16	24	32	40	48	56		
	8' Lengths						16	20	24	28	32	40

** 3' Lengths*

07022004TLG