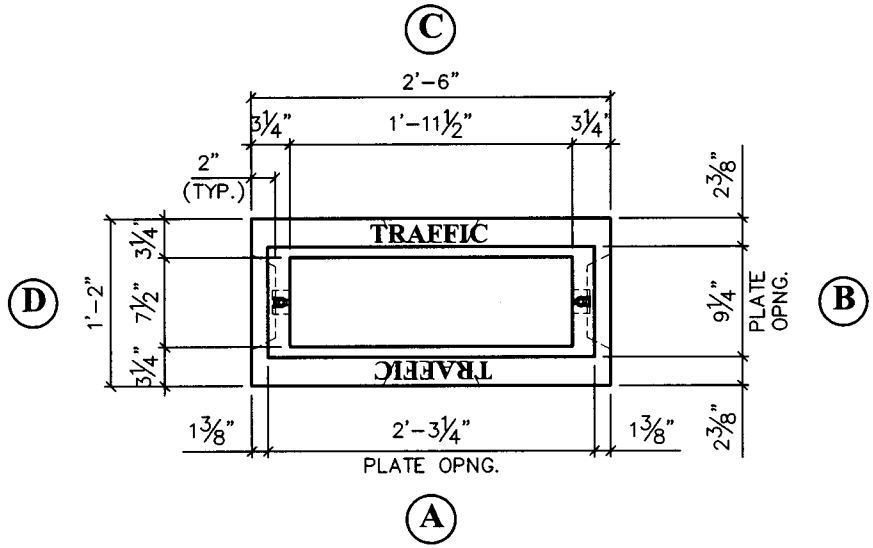


**PLAN VIEW**

## GENERAL NOTES:

1. DESIGN CONFORMS TO CDOT AND LOCAL SPECIFICATIONS.
2. CONCRETE COMPRESSIVE STRENGTH: 4,000 PSI @ 28 DAYS.
3. REINFORCING STEEL DEFORMED BARS CONFORM TO LATEST ASTM SPECIFICATION A615.
4. ALL REINFORCING SHALL HAVE 1½"MIN. CONCRETE COVER.
5. METHOD OF MANUFACTURE: WET CAST.
6. STRUCTURE SHALL BE CAST USING A SELF COMPACTING CONCRETE MIX.
7. SECTION IS MONOLITHIC.
8. THE WORD "TRAFFIC" SHALL BE CAST INTO THE TOP EDGE OF HANDHOLE, 1½" LETTERS.

**APPROXIMATE WEIGHT: 400 LBS.**

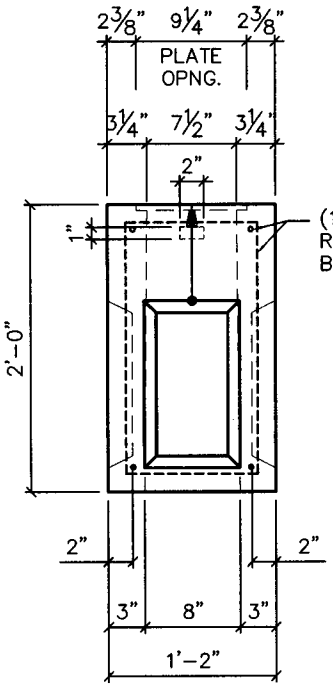


**ELEVATION "D"**

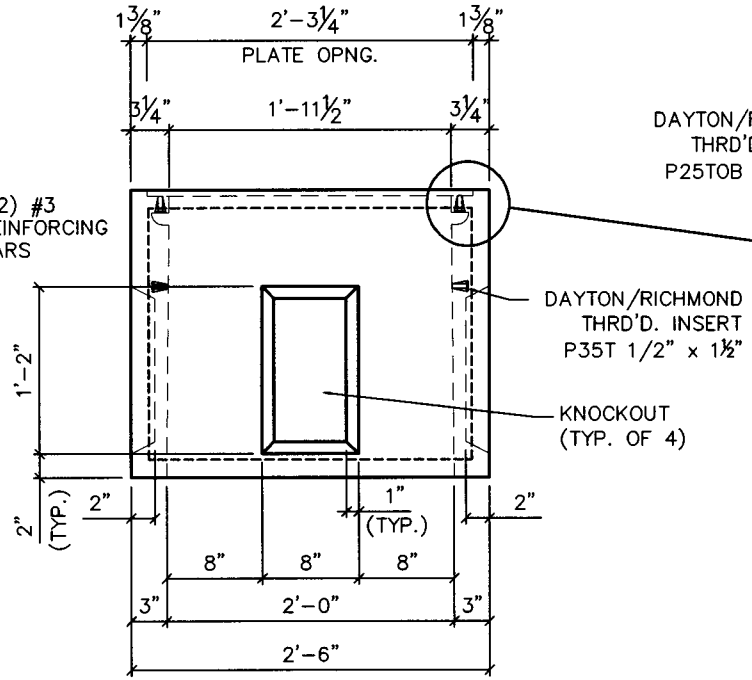


**ELEVATION "A"**

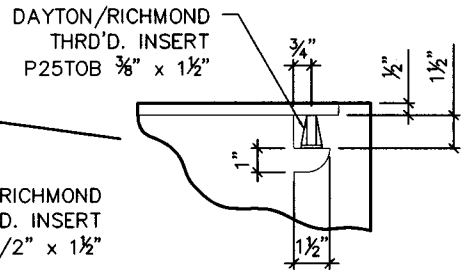


**INSERT w/CLEANOUT DETAIL**
(N.T.S.)

| | | | |
|---|---|---|---|
| UNITED CONCRETE PRODUCTS, Inc<br>173 CHURCH STREET<br>YALESVILLE, CT 06492<br>TEL: (203)-269-3119<br>FAX: (203)-265-4941 | CONCRETE HANDHOLE – TYPE II "TRAFFIC" | UCP JOB NUMBER | |
| | CUSTOMER STANDARD TYPE II – 8/20/08 | SCALE 3/4" = 1'-0" | |
| | JOB | DATE | SHEET |
| | LOCATION | DRW | HH-2T |
| | | CHK | |

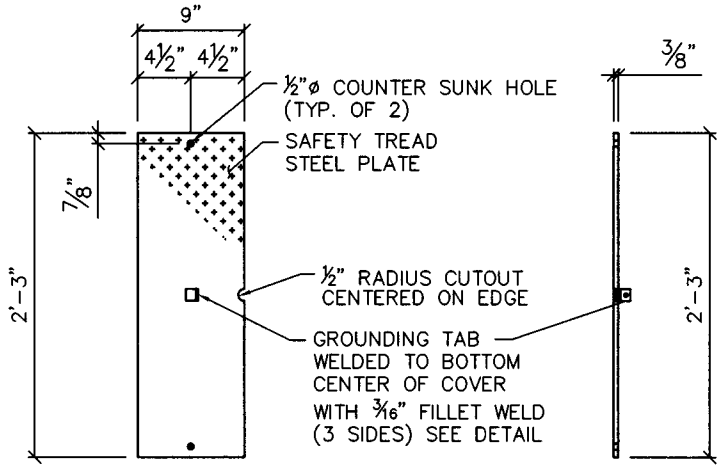


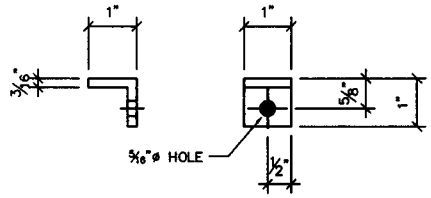


**STEEL GROUNDING TAB**
**SCALE: 3" = 1'-0"**

**NOTE: GALVANIZE COMPLETE COVER ASSEMBLY AFTER WELDING.**

**APPROXIMATE WEIGHT: 30 LBS.**

| | | | |
|---|---|---|---|
| UNITED CONCRETE PRODUCTS, Inc<br>173 CHURCH STREET<br>YALESVILLE, CT 06492<br>TEL: (203)-269-3119<br>FAX: (203)-265-4941 | RECESSED TYPE COVER FOR TYPE II HANDHOLE | UCP JOB NUMBER | |
| | CUSTOMER | SCALE 3/4" = 1'-0" U.N.O. | |
| | JOB | DATE | SHEET |
| | LOCATION | DRW | RC-2 |
| | | CHK | |