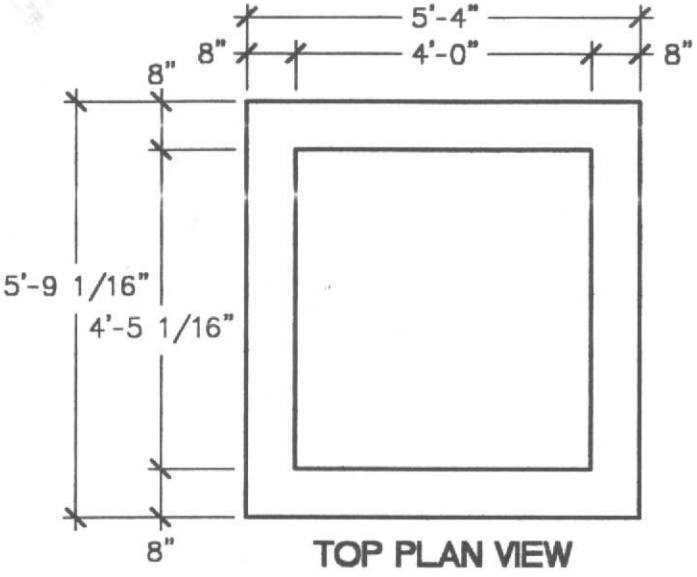

TOP PLAN VIEW

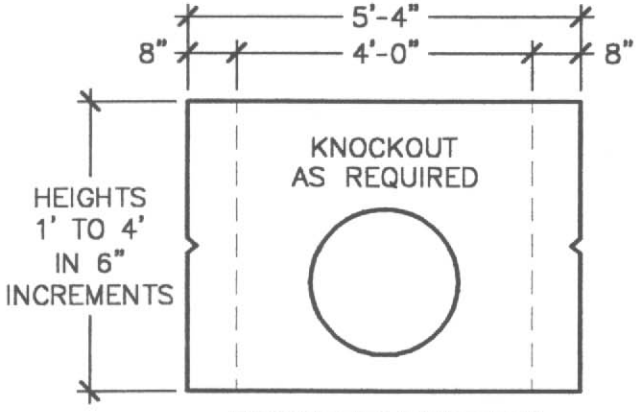

FRONT ELEVATION

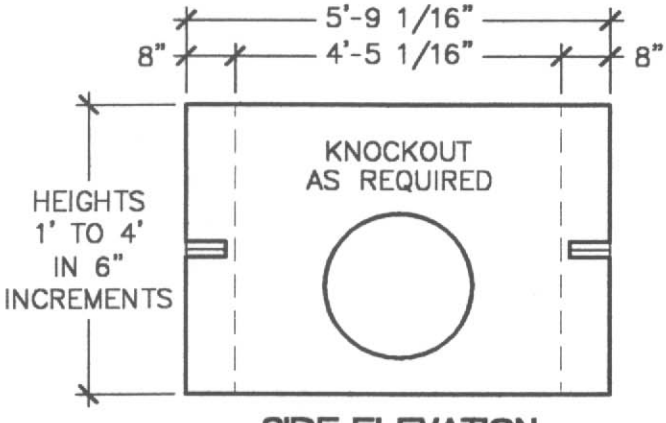

SIDE ELEVATION

TYPE I CATCH BASIN RISER

DESIGN COMFORMS TO CDOT AND LOCAL SPECIFICATIONS.

NOTES:

1. REINFORCING STEEL WELDED WIRE FABRIC CONFORMS TO LATEST ASTM SPECIFICATION A185.
2. REINFORCING STEEL DEFORMED BARS CONFORM TO LATEST ASTM SPECIFICATION A615.
3. CONCRETE COMPRESSIVE STRENGTH– 4000 PSI AT 28 DAYS.
4. METHOD OF MANUFACTURE: WET CAST.
5. SECTION IS MONOLITHIC.
6. DESIGN LOAD: AASHTO H–20
7. KNOCKOUT SIZES AND LOCATIONS ARE CAST AS REQUIRED.

WEIGHT CHART

PRODUCT	APPROX WEIGHT
WALL RISER PER FOOT	1950 LBS.

UNITED CONCRETE PRODUCTS INC.

173 CHURCH STREET
YALESVILLE, CT 06492

TEL. 800 234–3119
(203) 269–3119

FAX. (203) 265–4941