Precast Concrete Curbing

Six Concrete Reasons to choose Precast Curbing from United Concrete Products

1. **PRECAST CURB IS DURABLE**
   With the proven life expectancy of concrete, precast curbing has the durability required to withstand harsh New England winters without deteriorating in the summer sun.

2. **PRECAST CURB IS GOOD-LOOKING**
   Clean lines and quality finishes give precast concrete curbing the esthetic edge. And concrete's proven resistance to abrasion means curbing that wears beautifully — year after year. No cast-in-place substitute could possibly measure up.

3. **PRECAST CURB IS EASILY INSTALLED**
   Precast concrete curbing installs smoothly, and is just as easy to replace or reconfigure. Our wide selection of various length straights, radii, and transition ends offer flexibility not only during the initial installation, but throughout the life-time of your project.

4. **PRECAST CURB IS QUALITY ASSURANCE**
   Precast concrete curb means assurance of the highest quality concrete plus computer controlled consistency and factory installed reinforcement — all of which is unavailable in any cast-in-place substitute.

5. **PRECAST CURB IS READILY AVAILABLE**
   Our modern manufacturing facilities can usually turn your order around in days. And because all segments are shipped according to your plans, you'll avoid costly installation delays.

6. **PRECAST CURB IS COST-EFFECTIVE**
   Precast concrete curbing offers excellence with economy. You'll enjoy esthetics and permanence at much lower prices than granite. And the long life durability of precast curb offers a permanent advantage over bituminous and cast-in-place concrete curbing. The result — long term savings in time and money.

CONCRETE CURBING

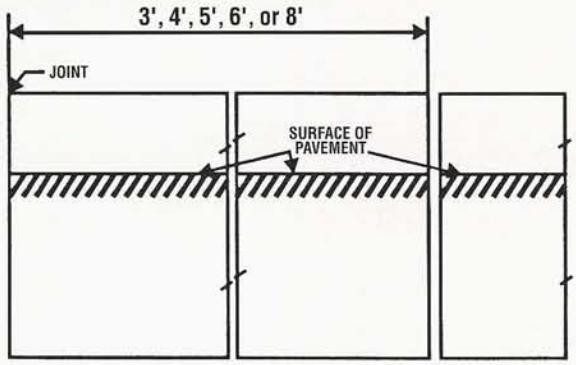

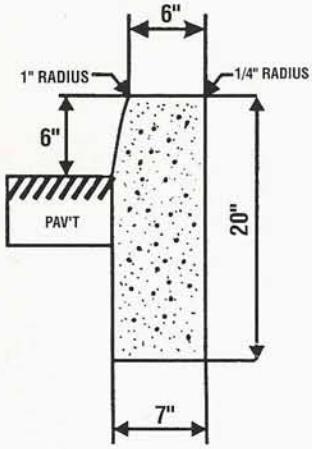

CONCRETE PARK CURBING

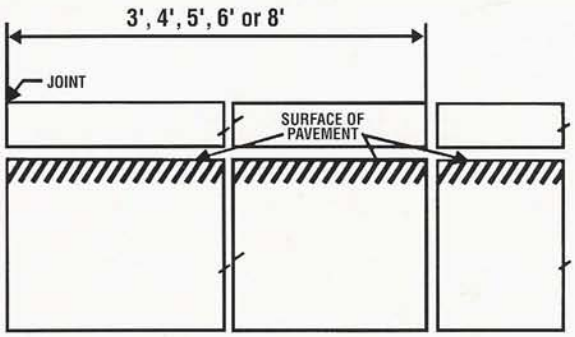

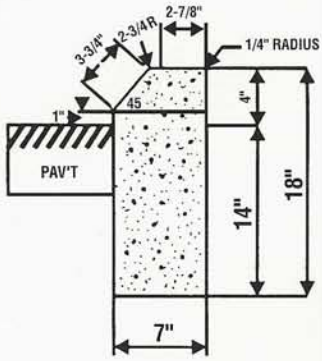

SPECIFICATIONS:

1. Concrete strength 5000 psi
2. Weight 135 lbs./LF
3. Reinforced with 2 - #3 deformed reinforced bars
4. 5 - 7% air entrainment
5. Manufactured to Connecticut D.O.T. specifications
6. 2x6" LG #5 Rebar - Connecting Pins

Precast concrete curbing is available in two types:

CONCRETE CURBING:
20"H with squared edge finish.

CONCRETE PARK CURBING:
18"H with beveled edge.

Both types meet Connecticut DOT specifications.
Standard Features:
dowel lift hole: 1"dia. x 4"depth.
Continuous reinforcement.

STRAIGHT
DIMENSIONS:
Concrete Curbing: 20"H x 6"W (top) x 7"W (base)
Concrete Park Curbing: 18"H x 2-7/8"W (top) x 7"W (base)
STANDARD LENGTHS:
8', 6', 5', 4' and 3'

RADIUS
DIMENSIONS: Same as Straight sections above
STANDARD RADII: Concrete Curbing and Concrete Park Curbing in 4' lengths can be assembled to form the following radii: 2', 3', 5', 10', 15', 20', 25', 30' and 35'. Consult chart (right) when ordering. 40'R and 50'R available in 8' lengths - Concrete Curb only

TRANSITION END
DIMENSIONS:
Concrete Curbing: 20"H x 6"W (top) x 7"W (base)
Concrete Park Curbing: 18"H x 2-7/8"W (top) x 7"W (base)
STANDARD LENGTH: 6' and 3' for Concrete and 3' for Concrete Park Curbing.

90° INSIDE AND OUTSIDE CORNERS
Corner sections available for concrete curb.

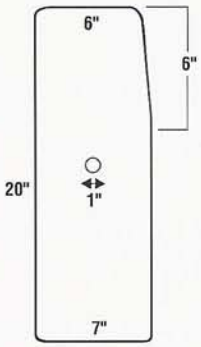

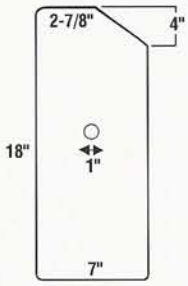

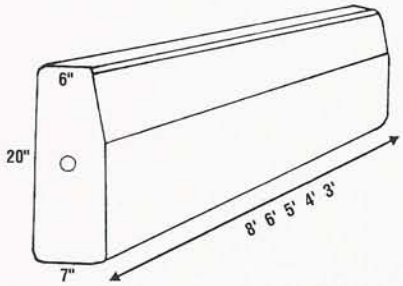

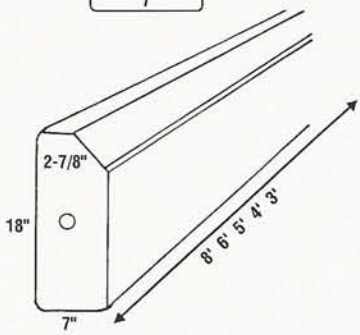

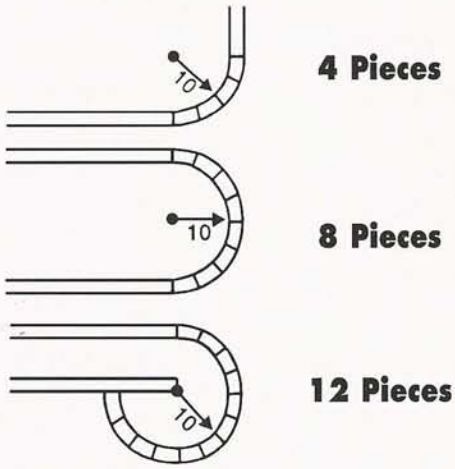

Radius: 10' Pieces per full circle = 16

Radius	No. Pieces Req/Circle
2'	4
3'	4
5'	8
10'	16
15'	24
20'	32
25'	40
30'	48
35'	56
40'	32
50'	40

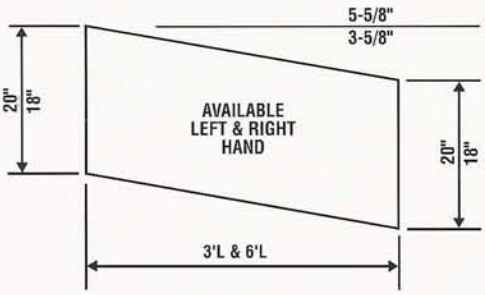

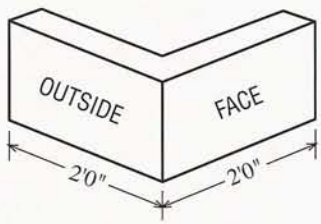

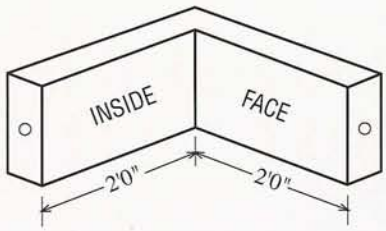

UNITED
CONCRETE PRODUCTS
www.unitedconcrete.com

United Concrete Products, Inc.
173 Church Street Yalesville, CT 06492
(800) 234-3119 Fax: (203) 265-4941