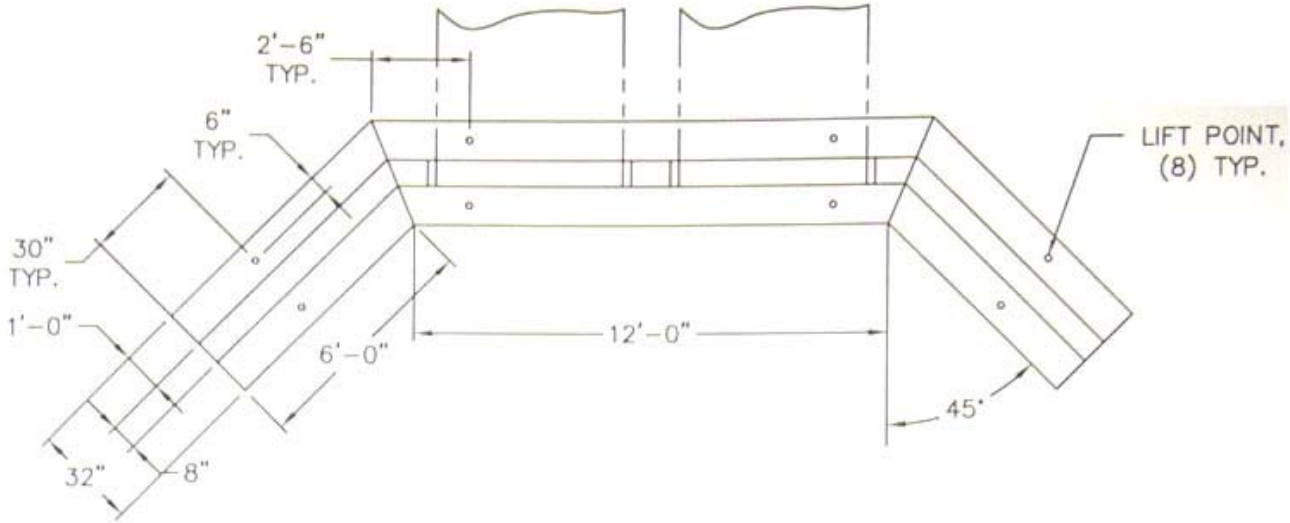

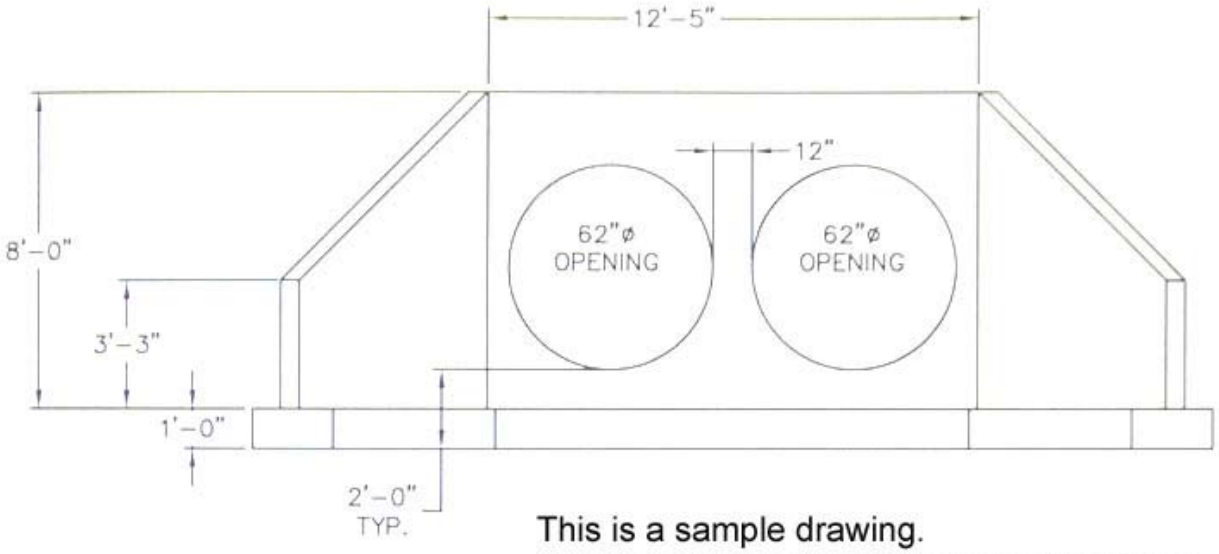

This is a sample drawing.
Fabricated according to your specifications.

NOTES:

1. CONCRETE COMPRESSIVE STRENGTH – 5000 PSI AT 28 DAYS.
2. REINFORCING STEEL DEFORMED BARS CONFORM TO LATEST ASTM SPECIFICATION A615.
3. FOOTING REINFORCEMENT: #5 BAR @ 8" O.C. EACH WAY TOP & BOTTOM
4. WALL REINFORCEMENT: #5 BAR @ 8" O.C. EACH WAY, EACH FACE

WEIGHT – 30,000 lbs

UNITED CONCRETE PRODUCTS INC.
173 CHURCH STREET
YALESVILLE, CT 06492
TEL. 800 234-3119
(203) 269-3119
FAX. (203) 265-4941