2'x2' YARD DRAIN RISER WITH BASE AND RISER

NOTES:

1. REINFORCING STEEL WELDED WIRE FABRIC CONFORMS TO LATEST ASTM SPECIFICATION A185.
2. REINFORCING STEEL DEFORMED BARS CONFORM TO LATEST ASTM SPECIFICATION A615.
3. CONCRETE COMPRESSIVE STRENGTH– 4000 PSI AT 28 DAYS.
4. METHOD OF MANUFACTURE: WET CAST.
5. SECTION IS MONOLITHIC.
6. DESIGN LOAD: AASHTO H–20

WEIGHT CHART

PRODUCT	APPROX WEIGHT
2' RISER W/ BASE	730 LBS.
30" RISER W/ BASE	900 LBS.
3' RISER W/ BASE	1070 LBS.
12" RISER (BLANK)	340 LBS.
2' RISER	500 LBS.
30" RISER	670 LBS.
3' RISER	840 LBS.

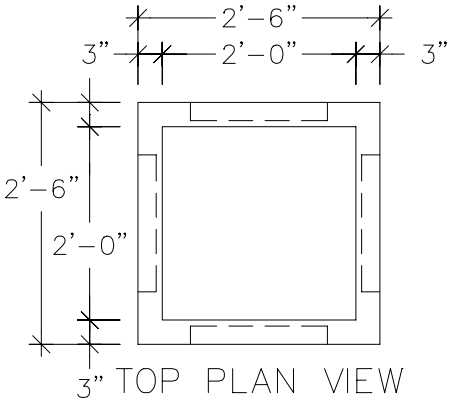

TOP PLAN VIEW

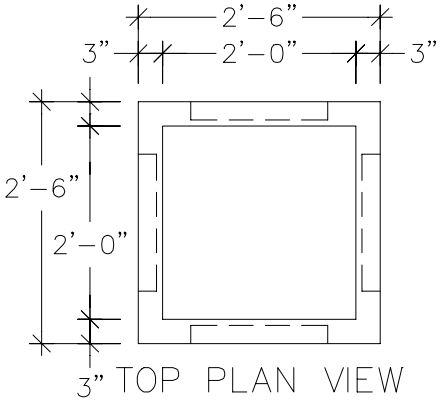

TOP PLAN VIEW

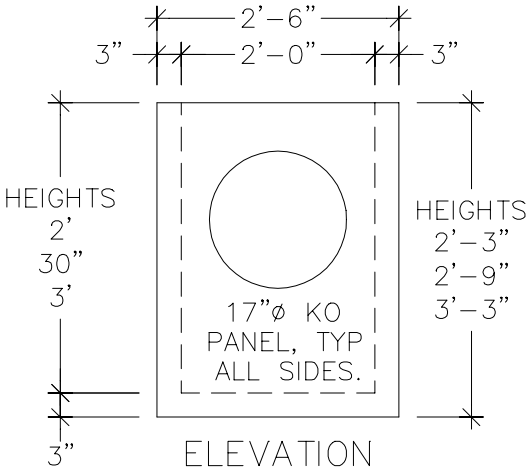

ELEVATION
RISER W/ BASE

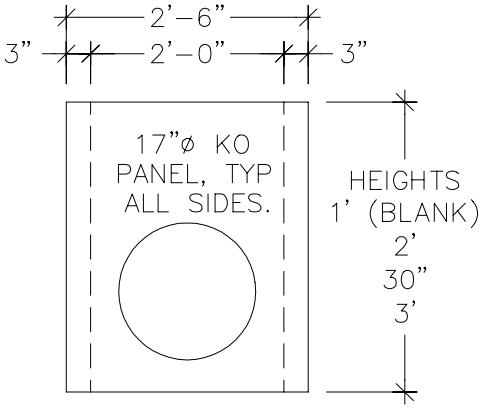

ELEVATION
RISER

UNITED CONCRETE PRODUCTS INC.

173 CHURCH STREET
YALESVILLE, CT 06492

TEL. 800 234–3119
(203) 269–3119

FAX. (203) 265–4941