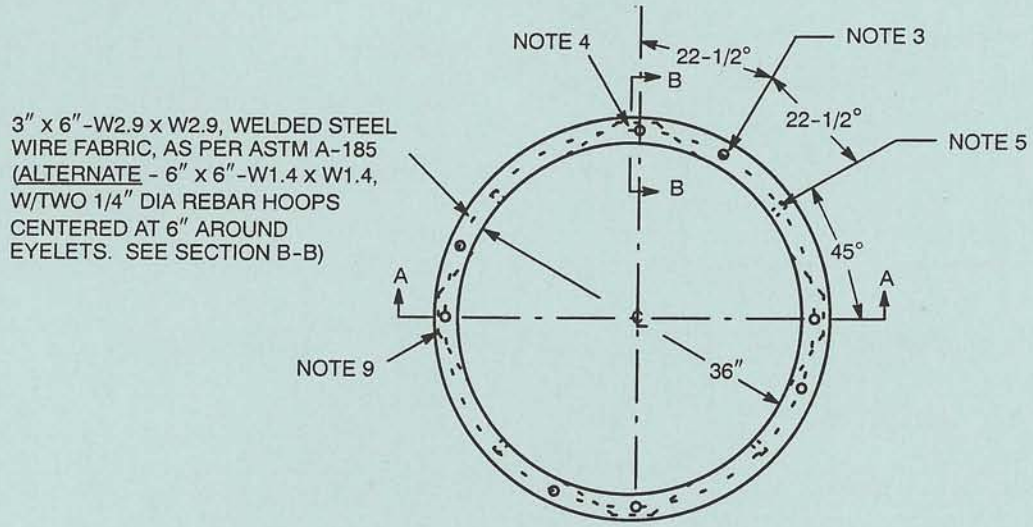

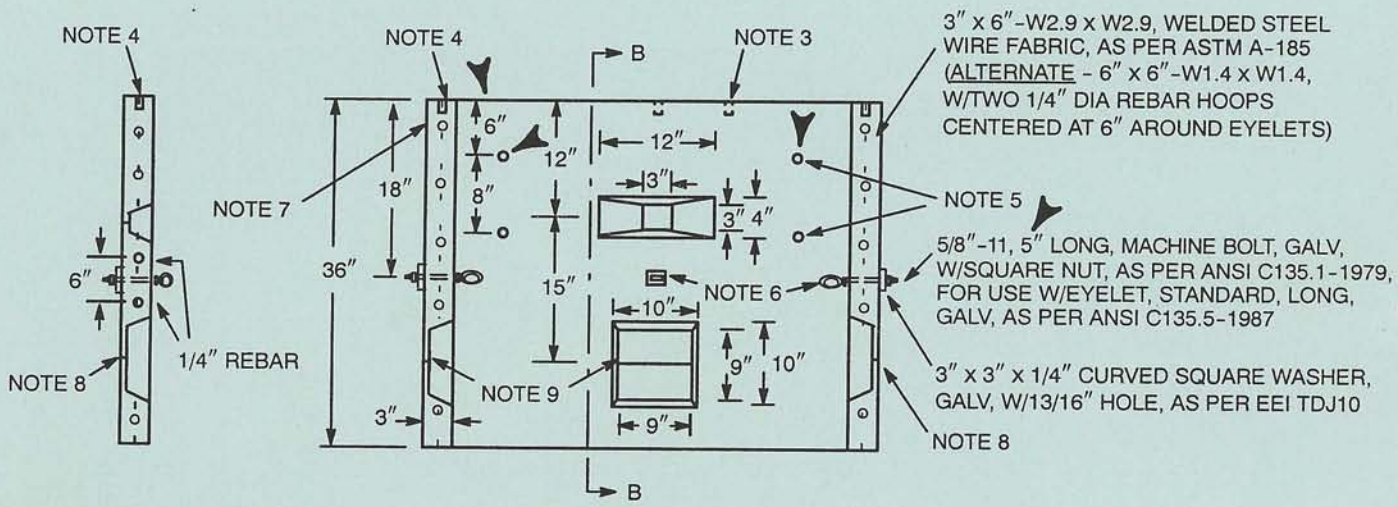

SECTION B-B
(SHOWS ALTERNATE REBAR LOCATION)

SECTION A-A

Notes

1. Concrete and concrete design shall be in accordance with ACI 318-1995.
2. Concrete strength 5000 psi at 28 days. Air entrainment 6 to 8 percent.
3. Four zinc alloy inserts 3/8″ - 16 x 1-3/8″ equally spaced on 38-1/2″ bolt circle.
4. Four zinc alloy inserts 5/8″ - 11 x 1-11/16″ equally spaced on 38-1/2″ bolt circle.
5. Eight zinc alloy inserts 3/8″ - 16 x 1-3/8″.
6. Four eyelets, for use as pulling points, shall be installed adjacent to and centered above knockouts as shown.
7. Manufacturer's identification and month/year when manufactured shall be legibly marked in/on concrete on the outside upper part.
8. Location of each knockout shall be identifiable from exterior of handhole by providing a 3″ diameter circle imprinted 1/4″ deep into the concrete. Center of the imprinted circle shall be located at center of each knockout.
9. All knockouts shall have a web thickness not to exceed 3/4″ ±1/8″. Knockouts to be free of reinforcement.
10. The two recesses 12″ from top are for use with adjustable lifter tool only.
11. Eyelets and zinc alloy inserts not to be used for lifting.

ORIGINAL 5/13/86 APPROVED 6/9/00	**HANDHOLE - ROUND - PRECAST CONCRETE 36″ DIAMETER x 36″ HIGH**			
	NORTHEAST UTILITIES	MATERIAL SPECIFICATION	**SPC H-020**	**6**