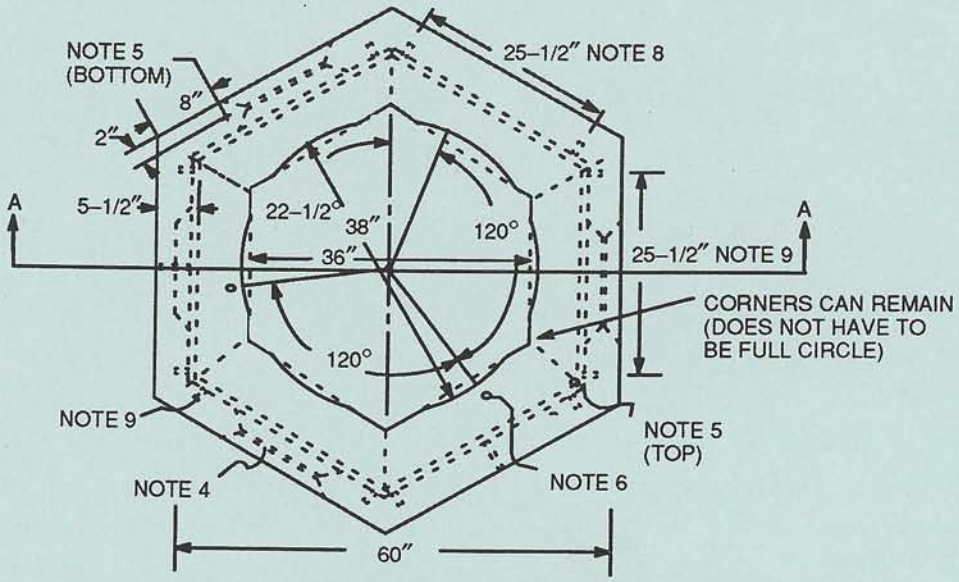

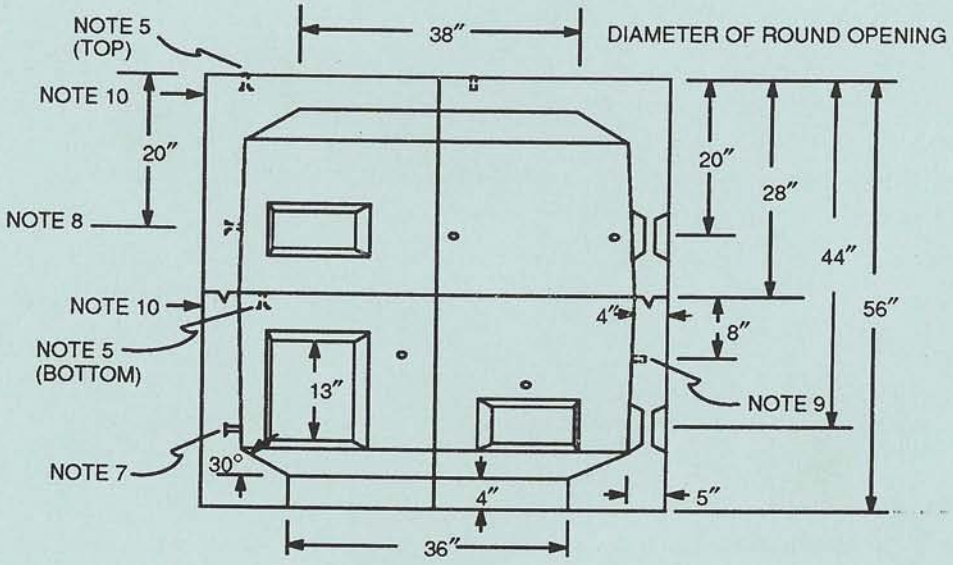

SECTION A–A

NOTES

1. Design loading shall be in accordance with AASHTO HS20–1983.
2. Concrete and concrete design shall be in accordance with ACI 318–1986.
3. Concrete shall have a minimum 28 day strength of 4000 psi and a maximum 28 day strength of 5000 psi.
4. Five inch x 12 inch knockouts, (3) in the top, (3) in the bottom and (1) 12 inch x 13 inch knockout in the bottom shall be clear of reinforcement.
5. 3/4 inch – coil loop inserts – 6 inch – (Dayton B–16) with insert locator plug (Dayton T–21). Two each in top and bottom sections for lifting with swivel plate. Inserts are to be secured in place with rebar.
6. Zinc alloy inserts 5/8 inch – 11 x 1–1/2 inches for extension (3) on 41 inch bolt circle.
7. Zinc alloy inserts 3/4 inch – 10 x 3 inches for cable pulling (4) opposite knockouts in bottom section.
8. Zinc alloy inserts 1/2 inch – 13 x 1–1/2 inches (6) for mounting junction connectors.
9. Zinc alloy inserts 3/8 inch – 16 x 1–1/2 inches (6) for supporting ground bus.
10. Manufacturer's identification and month/year when manufactured shall be legibly marked in/on concrete on the outside upper part.

ORIGINAL 10/3/75	HANDHOLE – HEXAGONAL – PRECAST CONCRETE 60″ WIDE X 56″ HIGH OUTSIDE			
APPROVED 12/13/90 F.S.	NORTHEAST UTILITIES	MATERIAL SPECIFICATION	SPC H–019	8