TRANSFORMER PAD
3 PHASE P–13

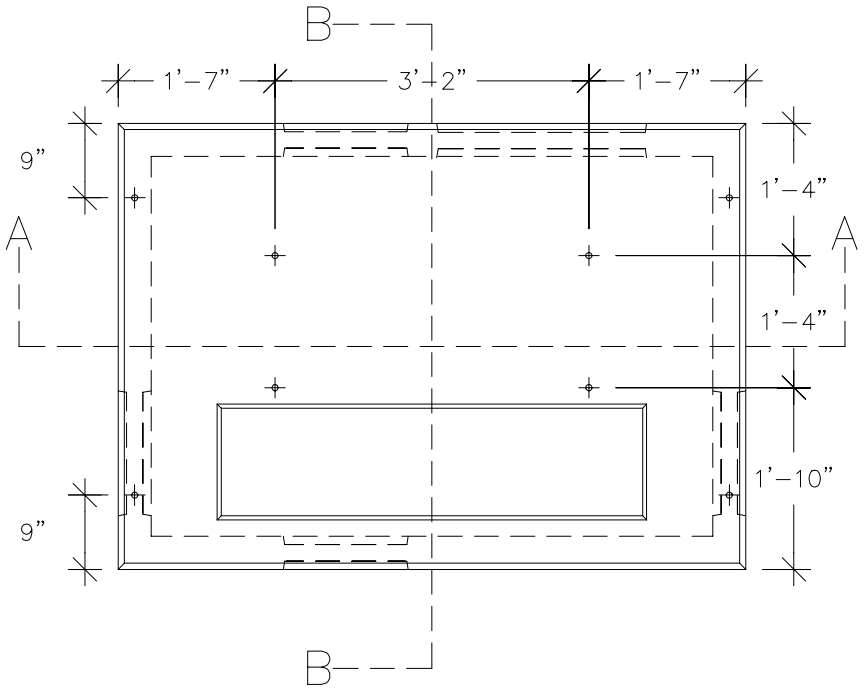

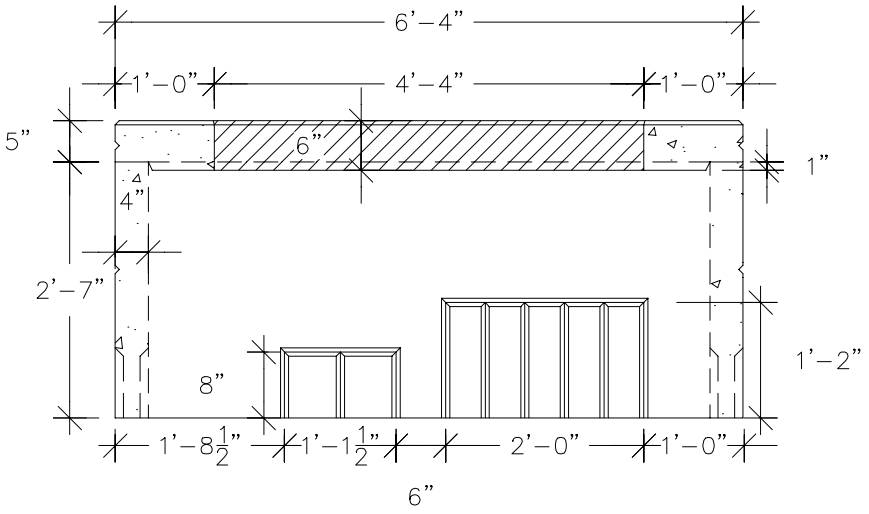

VIEW A–A

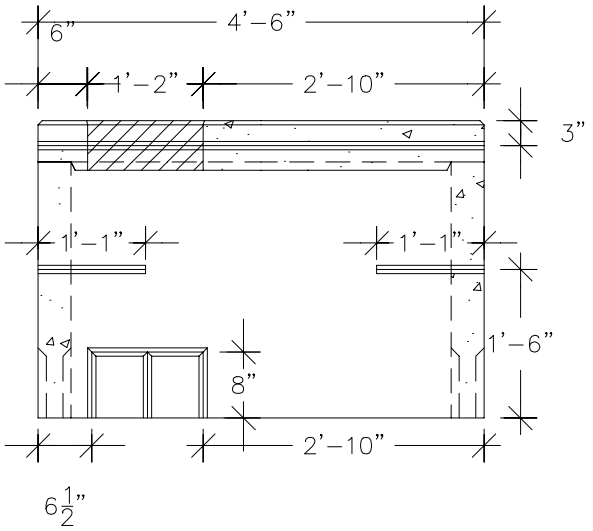

VIEW B–B

UNITED CONCRETE PRODUCTS INC.

173 CHURCH STREET TEL. 800 234–3119 FAX. (203) 265–4941
YALESVILLE, CT 06492 (203) 269–3119