TRANSFORMER PAD
UNITED ILLUMINATING
901 / 750–2000 KVA

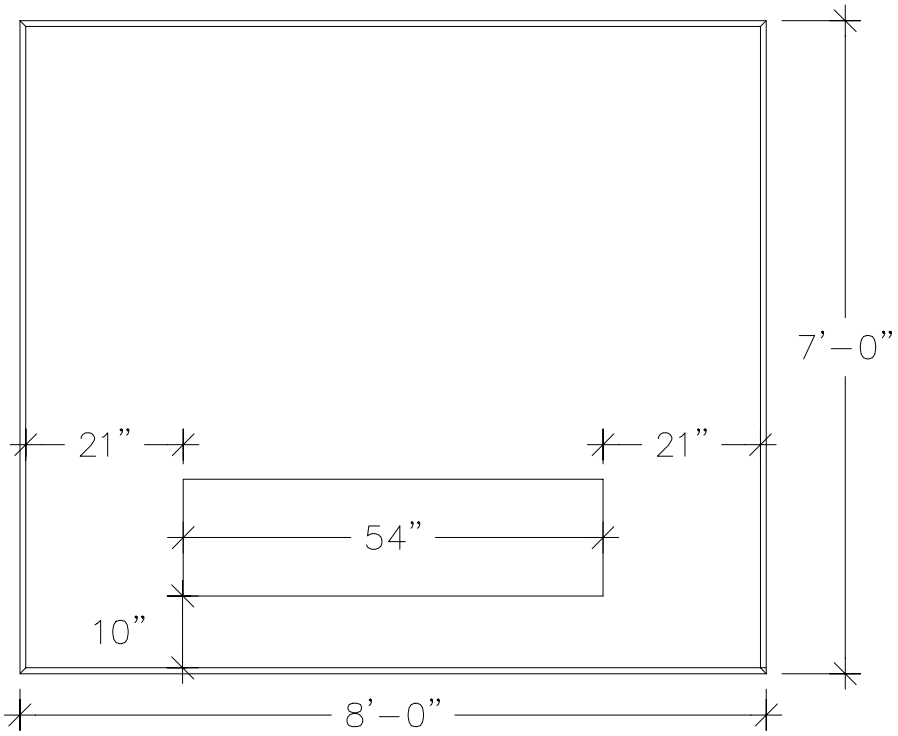

TOP VIEW

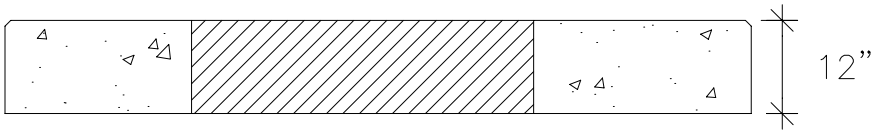

SIDE VIEW

NOTES:

1. MEETS ALL PROVISIONS OF UNITED ILLUMINATING
2. REINFORCING STEEL CONFORMS TO LATEST ASTM SPECIFICATION A185/A615
3. CONCRETE COMPRESSIVE STRENGTH– 4000 PSI AT 28 DAYS.
4. METHOD OF MANUFACTURE: WET CAST.
5. 7/8" LIFTING PINS REQUIRED

WEIGHT CHART

PRODUCT	APPROX WEIGHT
901	8,000 LBS.

UNITED CONCRETE PRODUCTS INC.

173 CHURCH STREET TEL. 800 234–3119 FAX. (203) 265–4941
YALESVILLE, CT 06492 (203) 269–3119